MTL-B2B0040F12IXHE

MT Series

PRELIMINARY TECHNICAL INFORMATION

HIGHLIGHTS

- Back-to-back topology
- Compact design
- Current, voltage and temperature sensors
- IGBT drivers included
- Ready to use

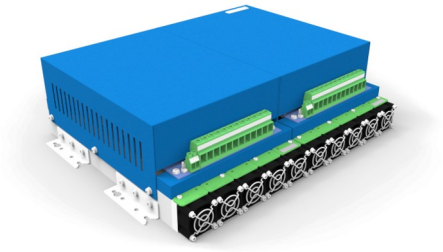

non-contractual photo

GENERAL INFORMATION

Compact and ready-to-use Back-to-back power stack for motor control or various inverter applications. This power stack includes the IGBTs (2x CBI modules) with a heatsink, the optocoupled drivers, output phase current sensors, DC-Link voltage sensors and internal NTC module temperature.

BRIEFING

Topology	B6I + capacitor bank + brake + B6I (Back-to-back)	
Market	Industrial	
Cooling system	Forced air (fans included)	
Semiconductor (Unit A)	MIXA40WB1200TED	
Semiconductor (Unit B)	MIXA40WB1200TED	
Driver system	2x SCiCoreDrive72	
Parameters monitorized	DC Link voltage, Current (6 phase) Temperature internal module NTC	
DC Link		1000 µF
Max Voltage applied to DC Link		750 V
Output current per phase	f_{SW}=10 kHz, T_J<125ºC T_{amb}=40ºC $f_{AC\ OUT}$=50 Hz, cosφ=0.85, m=0.94, V_{DCLink} = 600 V_{DC}	25 A

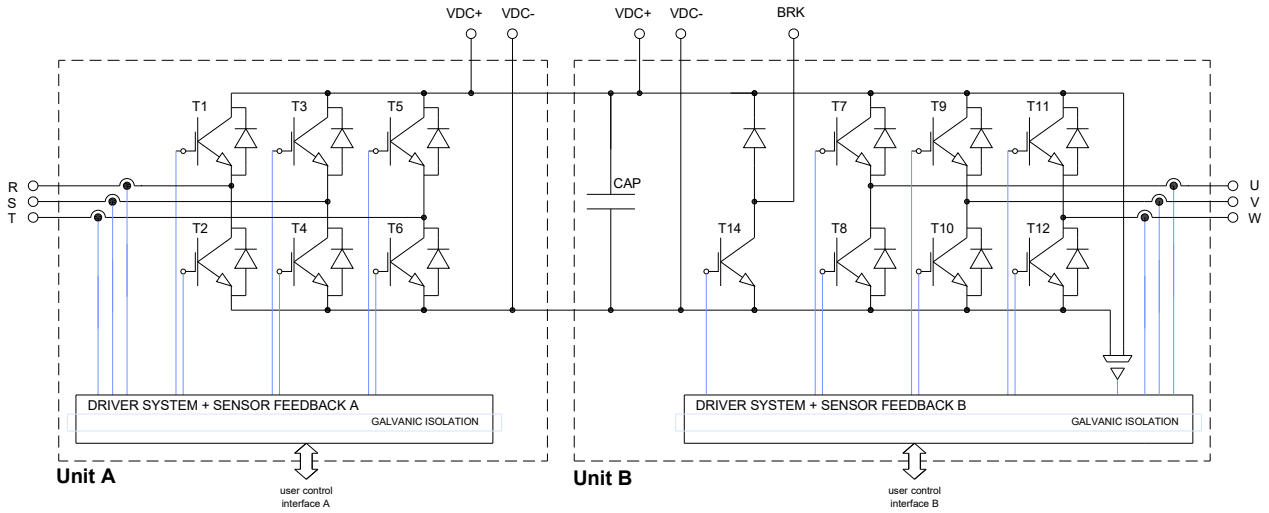

220304 Rev.:2

POWER STACK GENERAL CHARACTERISTICS

Description	Symbol	Notes / Test conditions	Min	Typ	Max	units
Max DC voltage	V_{DClink}				750	V_{DC}
Output current per phase	$I_{U,V,W}$ $I_{R,S,T}$	f_{sw}=10 kHz, T_J<125ºC T_{amb}=40ºC, m=0.94 $f_{AC\ OUT}$=50 Hz, cosφ=0.85, V_{DCLink} =600 V_{DC}			25	A_{RMS}
IGBT maximum junction temperature	T_{Jmax}				150	ºC
IGBT temp. under switching conditions	$T_{J\ (sw)}$		-40		125	ºC
Storage temperature	T_{stg}		-40		85	ºC
Operating temperature	T_{op}		-25		85	ºC
Power-to-control isolation voltage	V_{ISOp-c}	50 Hz @1min/ **note 1**	3			kV_{AC}
Module isolation voltage	V_{ISOmod}	50 Hz @1min/ **note 2**	3			kV
Weight (aprox)				11.6		kg

CAPACITOR BANK CHARACTERISTICS

Description	Symbol	Typ				Units
Single capacitor	C_R	Electrolytic type 1000 µF, 250 V				
Total equivalent capacitance	C_{equiv}			1000		µF
Capacitance Tolerance	Tol	*per device*	-20		20	%
Max. capacitor bank DC voltage	V_{DClink}				750	V
Wiring topology		*series, parallel*		3s, 3p		
Balance or discharge resistor	R_b	*per device*		33		kΩ

COOLING SYSTEM CHARACTERISTICS

Description	Symbol	Notes / Test Conditions	Min	Typ	Max	Units
Type		*Air cooled* *Heatsink: 2x RG14071/300 (Guasch)* *Fan system: 2x SC-C200V40/12 (Semicode)*				
Fan system supply voltage	V_{FAN}		11.3	12.0	13.2	V_{DC}
Fan system consumption	I_{FAN}			1580	1770	mA
Rated speed		*± 10%*		8200		rpm
Air flow		*Free air*		2.76		m^3/min
Static air pressure		*Free air*		34.0		Pa
Noise level		*per fan*		34.0		dBA
Failure rate		*per fan, 40ºC / 65% RH*		70,000		h

Data at T_a = 25 °C, V_{IN} = 12 V_{DC} and rated values, unless otherwise indicated

note 1: *This isolation voltage is referred to the minimum isolation voltage between any control/feedback signal (PWM, reset, fault, feedback sensor signals and supply) and any power voltage (AC/DC input, AC output).*

note 2: *This is an inner property of the IGBT module. It refers to the isolation between the internal chip and the external case.*

BRAKE ARM CHARACTERISTICS

Description	Symbol	Notes / Test Conditions	Min	Typ	Max	Units
BRAKE IGBT						
Collector-Emitter Voltage	V_{CES}	T_J=25ºC			1200	V
DC Collector current	I_{C80}	T_C=80ºC, T_J=150ºC			20	A
Collector-emitter saturation voltage	$V_{CE(sat)}$	I_C=16 A, T_J=125ºC		2.1		V
BRAKE DIODE						
Repetitive reverse voltage	V_{RRM}	T_J=25ºC			1200	V
Average forward current	I_{FAV}	T_C=80ºC			8	A
Forward voltage	V_F	I_C=10 A, T_J=125ºC		2.6		V

INVERTER CHARACTERISTICS

Description	Symbol	Notes / Test Conditions	Min	Typ	Max	Units
INVERTER IGBT						
Collector-Emitter Voltage	V_{CES}	T_J=25ºC			1200	V
DC Collector current	I_{C80}	T_C=80ºC, T_J=150ºC			40	A
Collector-emitter saturation voltage	$V_{CE(sat)}$	I_C=40 A, T_J=125ºC		2.70		V
FREE WHEELING DIODE						
Repetitive reverse voltage	V_{RRM}	T_J=25ºC			1200	V
Average forward current	I_{FAV}	T_C=80ºC, T_J=150ºC			29	A
Forward voltage	V_F	I_C=30 A, T_J125ºC		1.95		V

ENVIRONMENTAL SPECIFICATIONS

Description	
Protection grade (EN-60529 / CEI529 / UNE-20324)	IP-00
Humidity max.	50% RH @ 35ºC / 90% RH @ 20ºC
Pollution degree	III

MOUNTING CONSIDERATIONS

It is necessary a minimum distance of 100 mm with regard to the converter envelope. The free air circulation should be guaranteed. Avoid external heat sources nearby the assembly.
It is important to consider a safety margin regarding the working current, a 20% margin would be recommended.
For critical cases (24 hours work, repetitive overloads...), margins of 30% to 50% are used.

DRIVERS GENERAL CHARACTERISTICS

MTL-B2B includes *2x* 7-channel driver designed to control B6I/CBI topologies with an internal isolated DC-DC converter per channel.
Includes V_{CE} monitoring of each IGBT, providing the necessary protection of this one in case of desat failure by soft turning-off the corresponding IGBT, and triggering an optically isolated feedback fault signal, it also provides an under voltage lock out protection to avoid trigger the IGBT with insufficient gate voltage.
Each one of the drivers are completely independent from the others.

Description	Symbol	Notes / Test Conditions	Min	Typ	Max	Units
Logic low input voltages (PWM & reset)	$V_{IN,RESET}$		-0.5		0.8	V
Logic high input voltages (PWM & reset)	$V_{IN,RESET}$		2.0		5.5	V
Fault output current	I_{FAULT}				8	mA
Logic low input current (PWM & reset)	$I_{IN,RESET}$		-0.5	-0.4		mA
High output propagation time	$t_{d\ ON}$			300		ns
				440		
Low output propagation time	$t_{d\ OFF}$			320		ns
		C_G = 10 nF		460		
Desat. detection to FAULT output delay	$t_{d\ FAULT}$	R_G = 15 Ω		1.8	5	µs
Blanking time	t_{blank}	f_{SW} = 10 kHz			2.8	µs
Desat. detection to 90% V_{OUT}	$t_{d\ DES(90)}$			0.3	0.5	µs
Desat. detection to 10% V_{OUT}	$t_{d\ DES(10)}$			2	3	µs
Reset to fault	$t_{d\ RES\_FAULT}$		3	7	20	µs
Minimum pulse width for RESET	PW_{RES_min}		0.1			µs

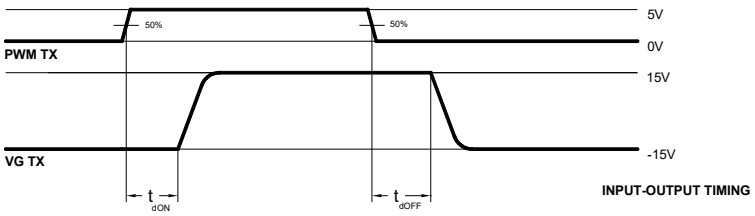

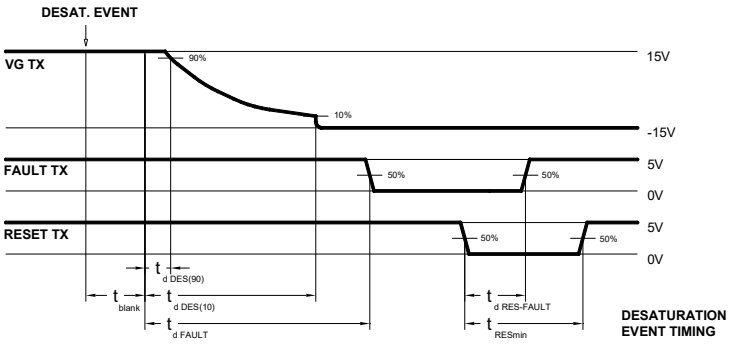

Warning Note:
The driver system does not generate dead time between channels. The user must ensure a correct dead time generation (no less than 1µs) with the control signals between the two IGBTs from each branch. If both IGBTs from the same branch switch on at the same time the module can be damaged.

SENSORS ELECTRICAL CHARACTERISTICS

Description	Symbol	Notes / Test Conditions	Min	Typ	Max	Units
Supply voltage	V_{CC}			±15		V
Feedback signal of output current	V_{cx}	*Accuracy = ±0.65%*	-10		10	V
Output current measurable range		@I_{meas} = 25 A	-40		40	A
Feedback signal of VDC-link voltage	V_U	*Accuracy = ±0.8%*	0		7.5	V
DC Link voltage measurable range		@V_{DCLink} = 750 V	0		750	V_{DC}
NTC rated resistance	$R_{NTC\ 25}$	*internal module NTC, T_C = 25ºC*		5		kΩ
NTC B value	$B_{25/50}$	***note 3***		3375		K

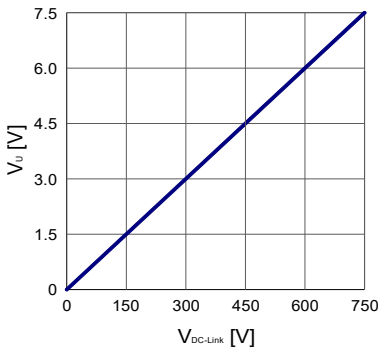

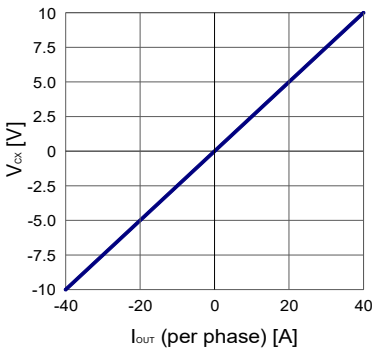

note 3:

$$R_T = R_{25} \cdot e^{B\left(\frac{1}{T[K]} - \frac{1}{298.15K}\right)}$$

EXTERNAL CONNECTIONS

Signal connections:

J1 CONVERTER A CONTROL CONNECTOR (male DB-25) is the main connector for the control switching signals for each IGBT, reset signal, and output fault signals on converter A. Also can be used to supply the drivers +12 V_{DC} for the whole stack. Pinout of this connector below.

Please find the device designation correspondence with the general schematic on the first page of this datasheet.

J1 - CONVERTER A, DB25 CONTROL CONNECTOR

Pin No.	Designation	Description
1	NC	Leave this pin unconnected
2	PWM T6	Input logic signal for switching T6 IGBT
3	GND CTL	Ground terminal for supply and logic signals **(note 5)**
4	FAULT T6	Fault open collector output signal from T6 channel
5	GND1	Connect to GND CTL! **(note 4)**
6	GND CTL	Ground terminal for supply and logic signals
7	NC	Leave this pin unconnected
8	VIN	+12 V_{DC} from supply voltage
9	NC	Leave this pin unconnected
10	GND CTL	Ground terminal for supply and logic signals
11	PWM T1	Input logic signal for switching T1 IGBT
12	RESET	Input logic signal for reset the converter A driver
13	FAULT T1	Fault open collector output signal from T1 channel
14	FAULT T4	Fault open collector output signal from T4 channel
15	VIN	+12 V_{DC} from supply voltage
16	PWM T4	Input logic signal for switching T4 IGBT
17	FAULT T2	Fault open collector output signal from T2 channel
18	VIN	+12 V_{DC} from supply voltage
19	PWM T2	Input logic signal for switching T2 IGBT
20	FAULT T5	Fault open collector output signal from T5 channel
21	GND CTL	Ground terminal for supply and logic signals
22	PWM T5	Input logic signal for switching T5 IGBT
23	FAULT T3	Fault open collector output signal from T3 channel
24	VIN	+12 V_{DC} from supply voltage
25	PWM T3	Input logic signal for switching T3 IGBT

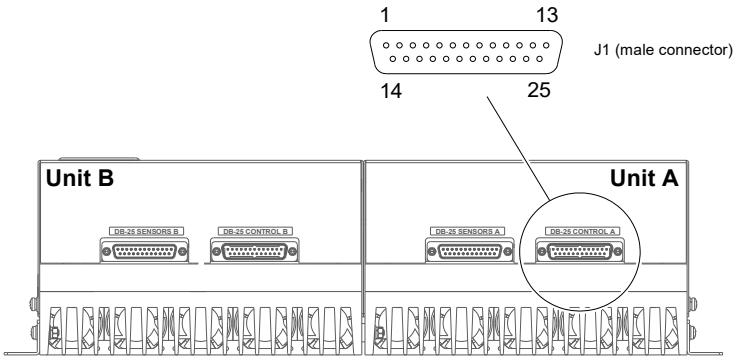

WARNING:

note 4: *Pin 5 from J1 (GND1)* ***must be*** *externally connected to GND_CTL when operating with the power stack.*

J3 CONVERTER B CONTROL CONNECTOR (male DB-25) is the main connector for the control switching signals for each IGBT, reset signal, and output fault signals on converter B. Also can be used to supply the drivers +12 V_{DC} for the whole stack. Pinout of this connector below.

Please find the device designation correspondence with the general schematic on the first page of this datasheet.

J3 - CONVERTER B, DB25 CONTROL CONNECTOR

Pin No.	Designation	Description
1	NC	Leave this pin unconnected
2	PWM T12	Input logic signal for switching T12 IGBT
3	GND CTL	Ground terminal for supply and logic signals **(note 5)**
4	FAULT T12	Fault open collector output signal from T12 channel
5	PWM T14	Input logic signal for switching T14 (brake) IGBT
6	GND CTL	Ground terminal for supply and logic signals
7	FAULT T14	Fault open collector output signal from T14 (brake) channel
8	VIN	+12 V_{DC} from supply voltage
9	NC	Leave this pin unconnected
10	GND CTL	Ground terminal for supply and logic signals
11	PWM T7	Input logic signal for switching T7 IGBT
12	RESET	Input logic signal for reset the converter B driver
13	FAULT T7	Fault open collector output signal from T7 channel
14	FAULT T10	Fault open collector output signal from T10 channel
15	VIN	+12 V_{DC} from supply voltage
16	PWM T10	Input logic signal for switching T10 IGBT
17	FAULT T8	Fault open collector output signal from T8 channel
18	VIN	+12 V_{DC} from supply voltage
19	PWM T8	Input logic signal for switching T8 IGBT
20	FAULT T11	Fault open collector output signal from T11 channel
21	GND CTL	Ground terminal for supply and logic signals
22	PWM T11	Input logic signal for switching T11 IGBT
23	FAULT T9	Fault open collector output signal from T9 channel
24	VIN	+12 V_{DC} from supply voltage
25	PWM T9	Input logic signal for switching T9 IGBT

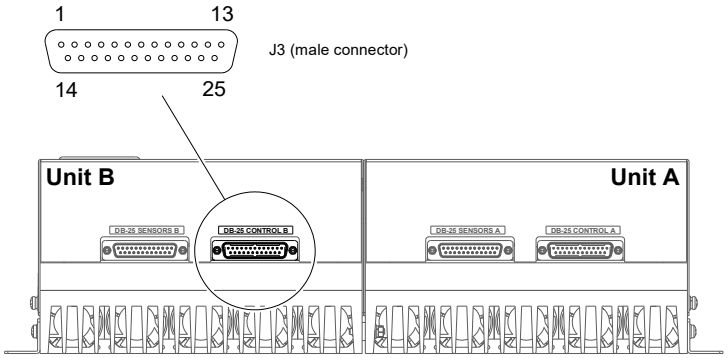

note 5: *All ground terminals "GND CTL" are internally interconnected on the whole stack.*

J2 CONVERTER A SENSORS CONNECTOR (female DB-25) is the main connector for the sensor signals on converter A: current outputs, DC-Link voltage and temperature sensor from IGBT power module. Below you can find the pinout for this connector.

J2 - CONVERTER A DB25 SENSORS CONNECTOR

Pin No.	Designator	Description
1	NC	Leave this pin unconnected
2	NC	Leave this pin unconnected
3	OUT_I_R	Output signal from R line current sensor
4	OUT_I_S	Output signal from S line current sensor
5	OUT_I_T	Output signal from T line current sensor
6	NC	Leave this pin unconnected
7	NC	Leave this pin unconnected
8	NC	Leave this pin unconnected
9	NC	Leave this pin unconnected
10	NC	Leave this pin unconnected
11	NC	Leave this pin unconnected
12	NC	Leave this pin unconnected
13	NC	Leave this pin unconnected
14	VDD A	15 V_{DC} from supply voltage for sensors
15	VDD A	15 V_{DC} from supply voltage for sensors
16	VDD A	15 V_{DC} from supply voltage for sensors
17	GND SENS A	Ground terminal for sensors supply and logic signals **(note 6)**
18	GND SENS A	Ground terminal for sensors supply and logic signals
19	NTC1	NTC1 signal from IGBT power module A
20	NTC2	NTC2 signal from IGBT power module A
21	GND SENS A	Ground terminal for sensors supply and logic signals
22	GND SENS A	Ground terminal for sensors supply and logic signals
23	VEE A	-15 V_{DC} from supply voltage for sensors
24	VEE A	-15 V_{DC} from supply voltage for sensors
25	VEE A	-15 V_{DC} from supply voltage for sensors

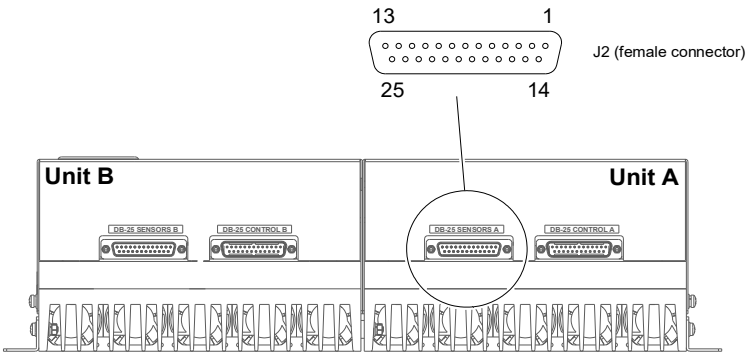

Please note that output signal from sensors is positive with respect GND SENS A when positive $I_{R,S,T}$ flows from the stack to the load.

J4 CONVERTER A SENSORS CONNECTOR (female DB-25) is the main connector for the sensor signals on converter B: current outputs, DC-Link voltage and temperature sensor from IGBT power module. Below you can find the pinout for this connector.

J4 – CONVERTER B DB25 SENSORS CONNECTOR

Pin No.	Designator	Description
1	NC	Leave this pin unconnected
2	DCLINK	Output signal from DC-Link voltage sensor
3	OUT_I_U	Output signal from U line current sensor
4	OUT_I_V	Output signal from V line current sensor
5	OUT_I_W	Output signal from W line current sensor
6	NC	Leave this pin unconnected
7	NC	Leave this pin unconnected
8	NC	Leave this pin unconnected
9	NC	Leave this pin unconnected
10	NC	Leave this pin unconnected
11	NC	Leave this pin unconnected
12	NC	Leave this pin unconnected
13	NC	Leave this pin unconnected
14	VDD B	15 V_{DC} from supply voltage for sensors
15	VDD B	15 V_{DC} from supply voltage for sensors
16	VDD B	15 V_{DC} from supply voltage for sensors
17	GND SENS B	Ground terminal for sensors supply and logic signals **(note 6)**
18	GND SENS B	Ground terminal for sensors supply and logic signals
19	NTC1	NTC1 signal from IGBT power module A
20	NTC2	NTC2 signal from IGBT power module A
21	GND SENS B	Ground terminal for sensors supply and logic signals
22	GND SENS B	Ground terminal for sensors supply and logic signals
23	VEE B	-15 V_{DC} from supply voltage for sensors
24	VEE B	-15 V_{DC} from supply voltage for sensors
25	VEE B	-15 V_{DC} from supply voltage for sensors

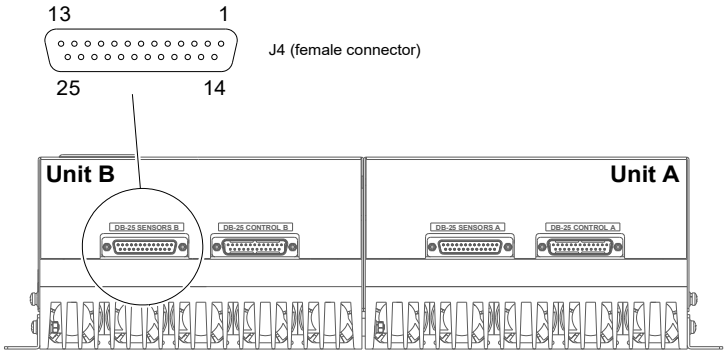

Please note that output signal from sensors is positive with respect GND SENS B when positive $I_{U,V,W}$ flows from the stack to the load.

note 6:

All ground terminals GND SENS A are internally interconnected but isolated from GND_CTL. Also, converter A and converter B do not share GND SENS, VDD and VEE. Those can be externally interconnected if needed.

Power connections:

J5 CONVERTER A, POWER TERMINALS is the main power connector for the Unit A. Connections for the AC power phases (R, S, T), DC Link power connections +DC and -DC and earth connection. Below you can find the pinout.

J5 – UNIT A, POWER TERMINALS

Terminal No.	Designation	Description
1	EARTH	Earth connection
2	NC	Leave this pole unconnected
3	NC	Leave this pole unconnected
4	NC	Leave this pole unconnected
5	+DC	Positive power terminal from converter DC-Link
6	-DC	Negative power terminal from converter DC-Link
7	NC	Leave this pole unconnected
8	NC	Leave this pole unconnected
9	NC	Leave this pole unconnected
10	T	T phase connection
11	S	S phase connection
12	R	R phase connection

J6 CONVERTER B, POWER TERMINALS is the main power connector for the Unit B. Connections for the AC power phases (U, V, W), DC Link power connections +DC and -DC, a brake connection and earth connection. Below you can find the pinout.

J6 – UNIT B, POWER TERMINALS

Terminal No.	Designation	Description
1	EARTH	Earth connection
2	BR	Brake connection
3	NC	Leave this pole unconnected
4	NC	Leave this pole unconnected
5	+DC	Positive power terminal from converter DC-Link
6	-DC	Negative power terminal from converter DC-Link
7	NC	Leave this pole unconnected
8	NC	Leave this pole unconnected
9	NC	Leave this pole unconnected
10	W	W phase connection
11	V	V phase connection
12	U	U phase connection

J7, J8 DC POWER SUPPLY CONNECTORS are the auxiliary power connector for the stack. The system must be supplied with $12V_{DC}$ Through J7 or J8 (internally connected). It supplies the power for the drivers, and the fan system (if the system has a air forced heatsink).

J7, J9 - DC POWER SUPPLY CONNECTOR

Terminal No.	Designation	Description
1	VIN	12 V_{DC} supply voltage
2	GND	GND supply voltage

J9, J10 FAN POWER CONNECTOR is the power connector for the fan system. This connector sinks directly the power from J8 and J7 connectors respectively. (Not used on natural cooled versions)

J9, J10 - FAN POWER CONNECTORS

Terminal No.	Designation	Description
1	GND	GND supply voltage
2	VIN	12 V_{DC} supply voltage

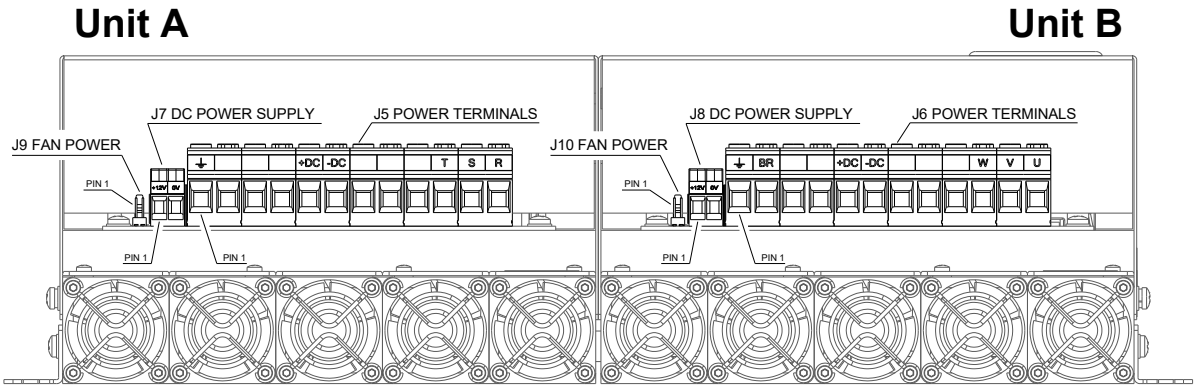

POWER STACK SUPPLIES

Description	Symbol	Notes / Test conditions	Min	Typ	Max	Units
Driver voltage supply	V_{IN}		10.8	12	13.2	V
Driver power supply	I_{IN}	*for each unit*	300		900	mA
Sensors voltage supply	V_{SENSE}			±15		V
Sensors power supply	I_{SENSE}	*for each unit*	50		250	mA

In order to supply the power stack user must feed the drivers and fan system (if applicable) with 12 V_{DC} from J7 or J8 or from J1 or J3 DB25 connector (see: J1/J3-DB25 CONTROL CONNECTOR pinout table).
Sensors must be supplied (±15 V) through J2 and J4 (see : J2/J4-DB25 SENSORS CONNECTOR pinout table).

MECHANICAL DIMENSIONS

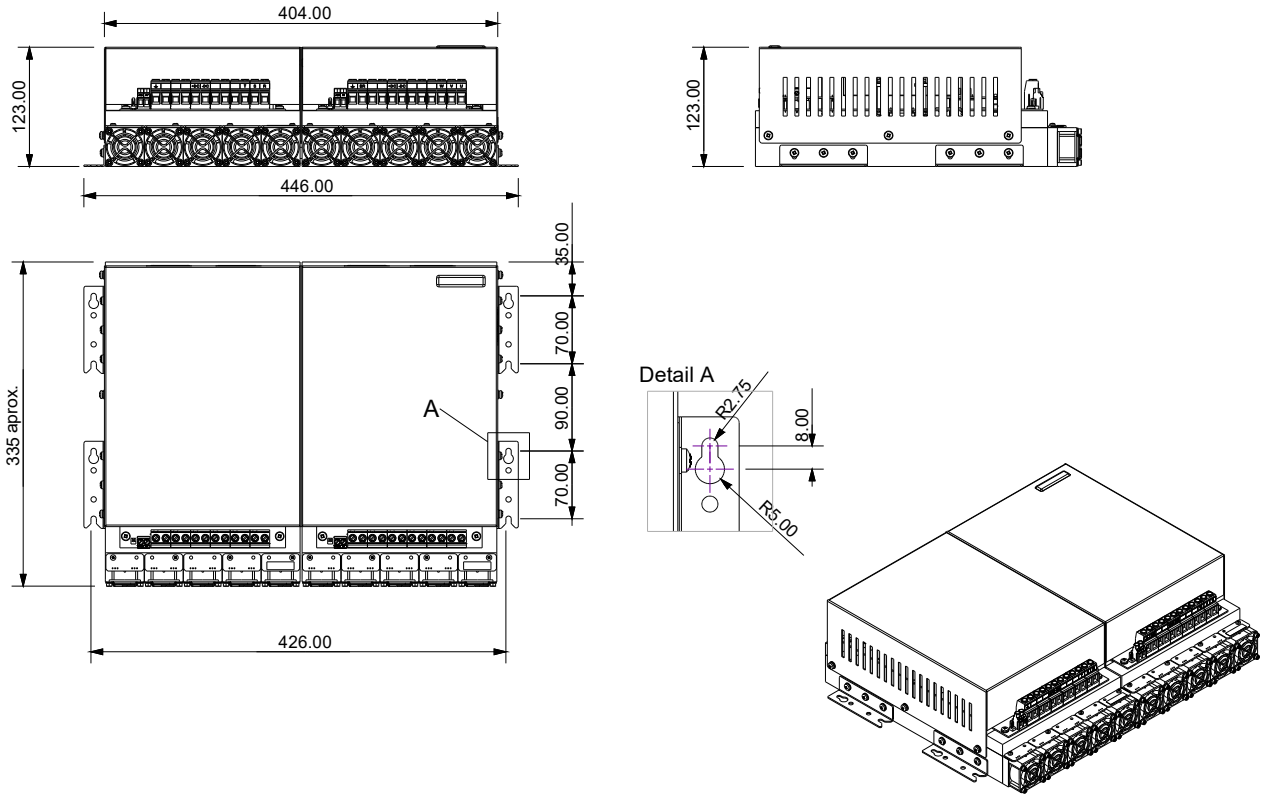

All dimensions in mm

Dimension	Typ	Units
Width	426	mm
Length	335	mm
Height	123	mm
Weight	11.6	kg

PERFORMANCE CURVES

Per unit, working as an inverter (sine-triangle control algorithm).

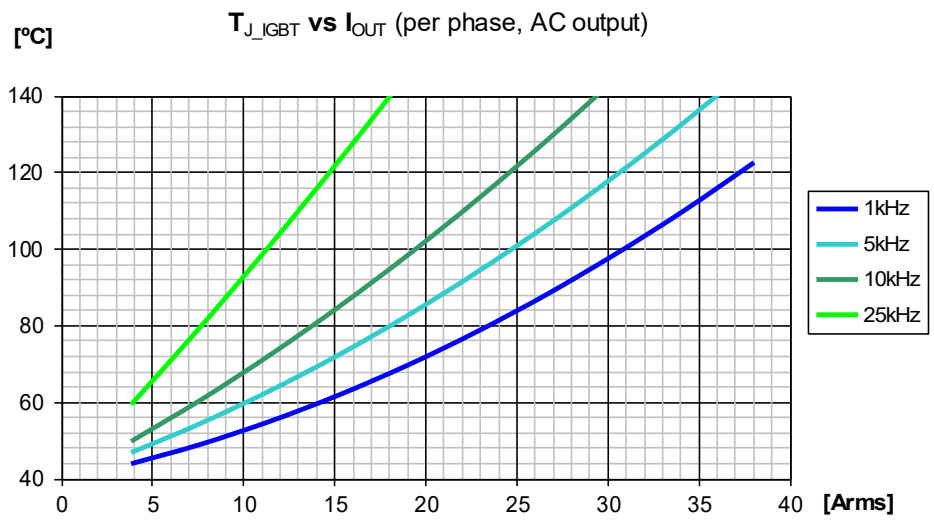

Condition	Symbol	Value	Units
Ambient temperature	T_A	40	ºC
DC Link voltage	V_{DCLink}	545	V_{DC}
Modulation index	m	1	
Load power factor	cos φ	0.85	
Output frequency	f_{OUT}	50	Hz

ANOTACIONES EN LA HOJA DE ESPECIFICACIONES:

RECTIFICADORES GUASCH, S.A. utiliza la siguiente anotación para identificar el estado del producto, en el lado izquierdo de la primera página:

PRELIMINARY TECHNICAL INFORMATION: El producto se encuentra en proceso de diseño y desarrollo. La información presenta los datos del producto pero algunas características pueden cambiar.
ADVANCED TECHNICAL INFORMATION: El producto se encuentra totalmente diseñado y las características se refieren a la fabricación en serie.
Sin anotación: Los parámetros del producto están fijados y se suministra de acuerdo con las especificaciones publicadas.

DATASHEET ANNOTATIONS:

RECTIFICADORES GUASCH, S.A. annotate datasheets in the left corner of the front page, to indicate product status:

PRELIMINARY TECHNICAL INFORMATION: The product is in design and development. The datasheet represents the product as it is understood but details may change.
ADVANCED TECHNICAL INFORMATION: The product design is complete and final characterisation for volume production is well in hand.
No Annotation: The product parameters are fixed and the product is available to datasheet specification.

Your Needs, Our Solutions